Unisto Unibox

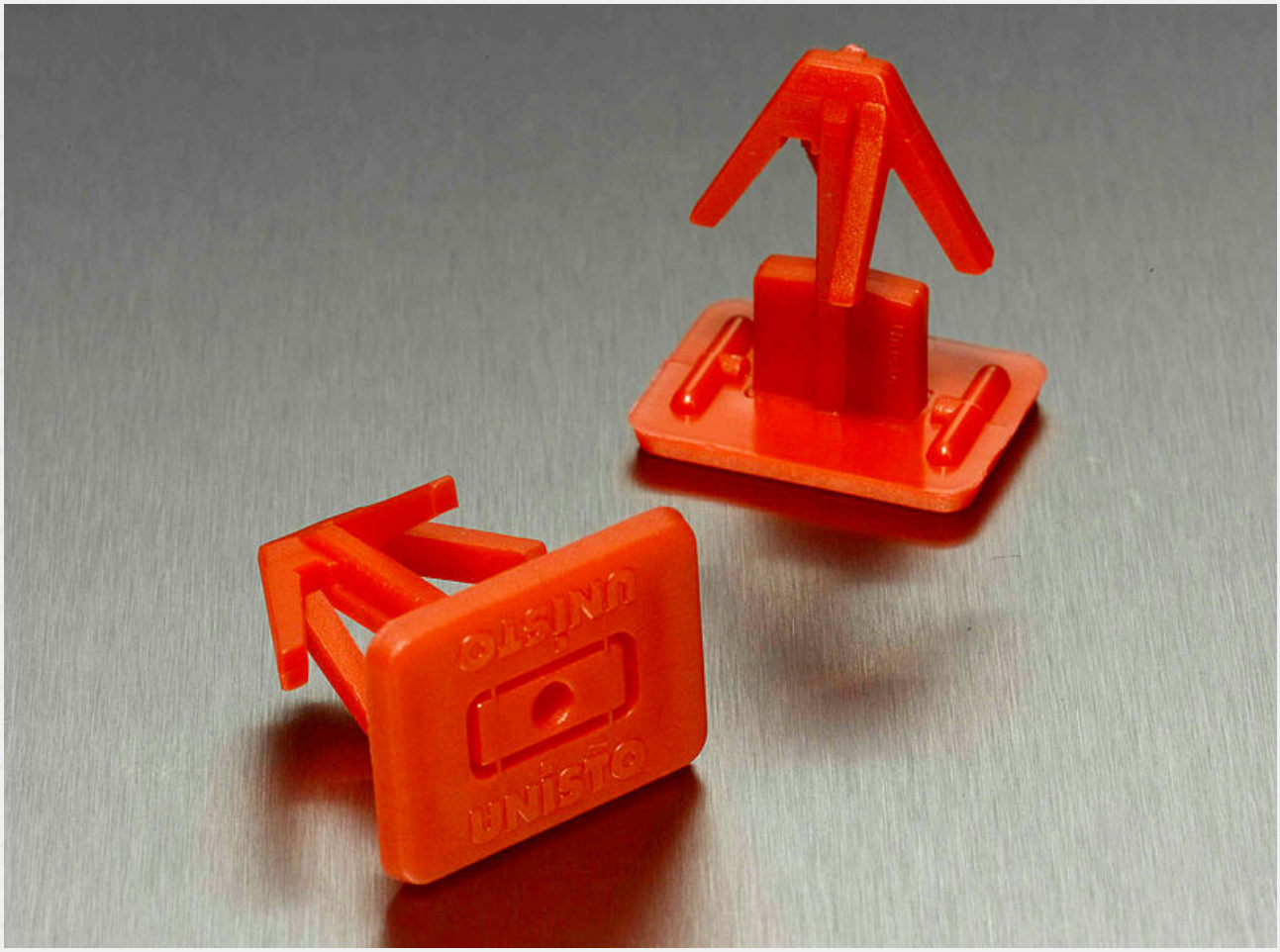

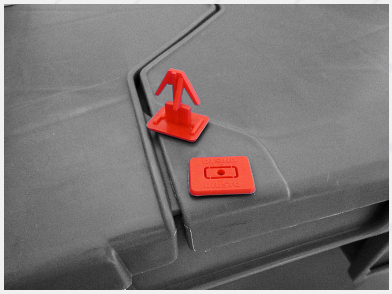

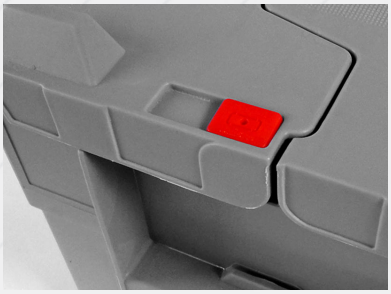

Push-Fit Security seal to seal any kind of Tote Boxes widely used in the Retail, Forwarder, Post and Transport industries. Easy to apply and remove. With four locking fingers and visible break-point it increases the security level. Available with Customer name/logo. Various plastic colours available.

© Unisto, www.unisto.com

Features of this security seal

Type of Seal
Special Seals

Application
Boxes

- Visible break-point on head increases tamper-evidence
- Four locking fingers secure grip in box and increases tamper resistance
- Customer name/logo for clear identification
- Various colours for logistical functions

© Unisto, www.unisto.com

Minimum size

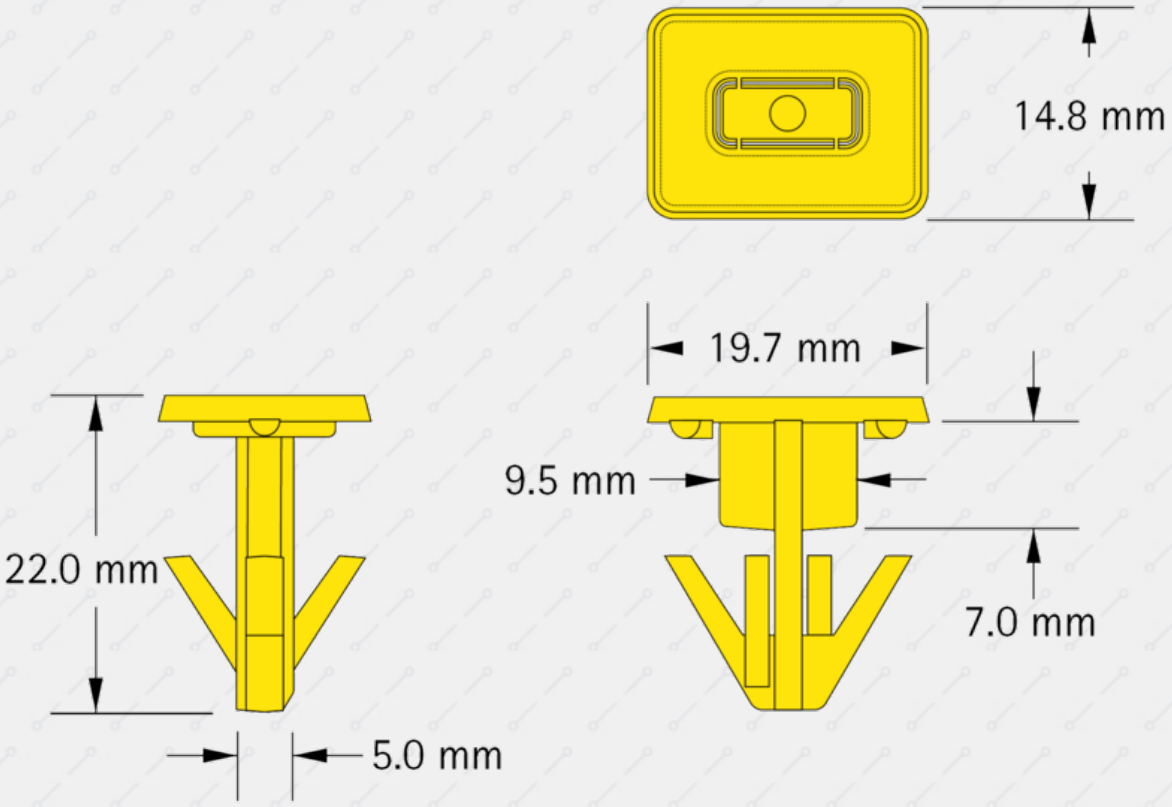

Materials
Polypropylene (PP)

Tensile strength
Approx. 2 kg

Customer name/logo
Blind embossed

Colours
Dark blue, dark green, red, grey, yellow, white, black.
Other colours available on request.

Packing
Loose in boxes of 5000 closures
39.0 x 24.0 x 28.0 cm (0.027 m3), approx. 4.2 kg

Storage
Seals should be stored in original box away from direct sunlight and chemical fumes.
Store at 22°C/50% RH. Typical shelf life of seals made of PP and PA are approx. 18 months from date of manufacture.
Nevertheless please do not order more than an annual quantity.

© Unisto, www.unisto.com