Unisto Varis eco (bio based PE)

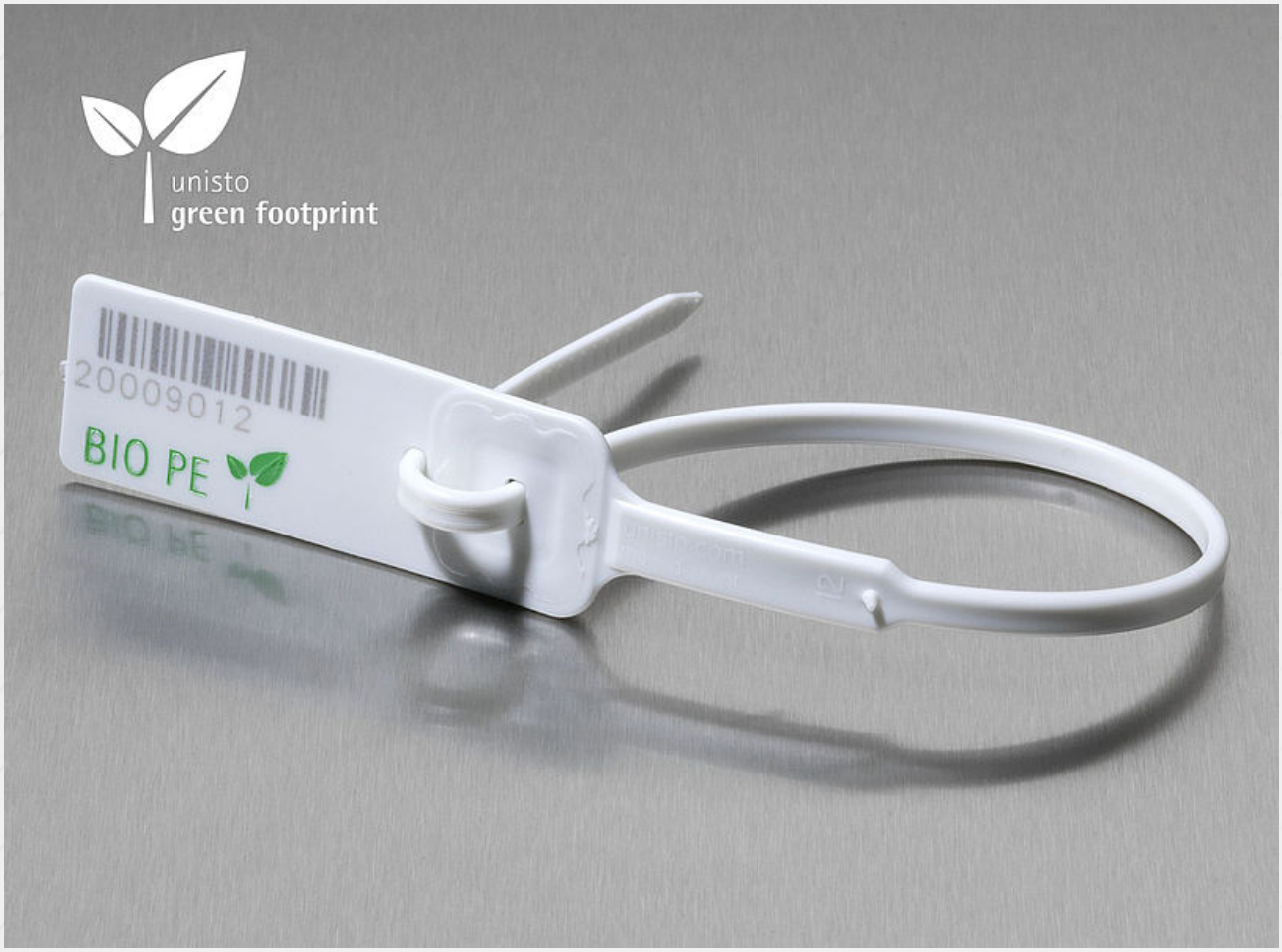

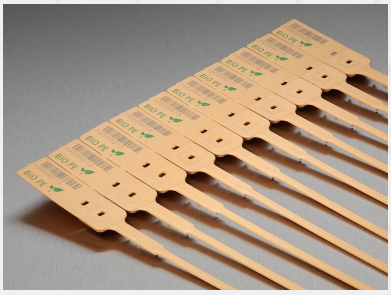

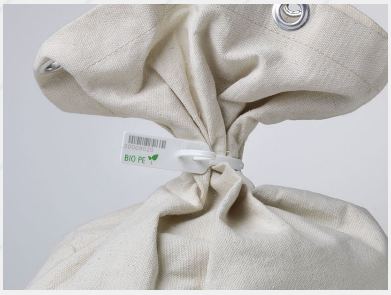

Adjustable length Security seal ideal to seal any kind of bags. Produced with bio based PE. Due to its high tensile strength our Unisto Varis is very popular in the Postal and Courier Services sector. Also used for application such as ballot & election boxes, Tote Boxes and Roll Cages. Spikes on the ribbon ensure a good grip to the neck of a bag. Barcoded numbering for fast, accurate reliable data capture and streamlining operations. Various plastic colours available. As an option the version "S" with a special plastic treatment, further increases the manipulation security

© Unisto, www.unisto.com

Features of this security seal

Type of Seal
Adjustable Lenght Seals

Application
Bags, Roll Cages

- Sustainable security seal
- Bio PE is a new material with a very high percentage of bio based content. Bio PE is made 94% with sugar cane and is 100% recyclable
- For the eco version is used less plastic, the strap width is just 4.0 mm
- High tensile strength reduces risk of accidental breakage
- Spikes on the ribbon prevent pulling off the seal from the neck of the bag
- Locking mechanism of stainless spring steel allows pulling tight with as little force as possible
- Barcoded numbering for fast, accurate and reliable data capture and streamlining operations
- Various colours for logistical functions
- Customer name/logo for clear identification
- Mats of 10 seals allows sequential distribution
- **Version "S": plastic specially treated, increases the manipulation security**

© Unisto, www.unisto.com

Minimum size

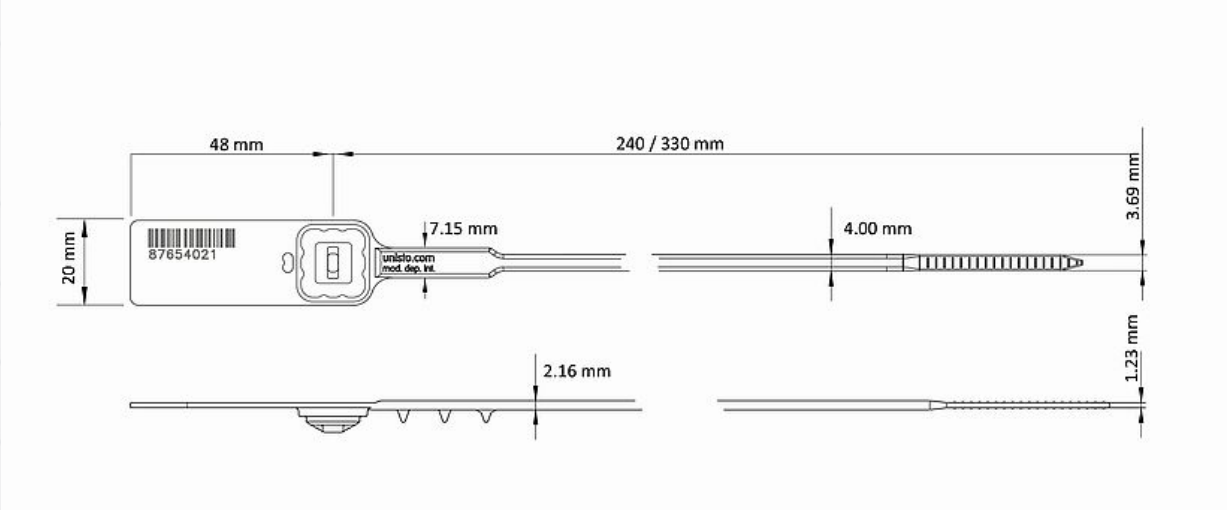

Materials
Strap/housing: bio based PE Disc: bio based PE Locking mechanism: stainless spring steel

Tensile strength (loop)
Approx. 29 kg

Barcoding
Interleaved 2/5 or barcode 128

Customer name/logo
Foil printed

Colours - Barcode directly laser marked
White, yellow, apricot, pink, purple, grey, light brown

Colours - Barcode laser marked off white foil
Dark blue, dark green, red, grey. Other colours available on request

Packing
mats of 10, boxes 0.022 m3 of 1'000 (54.5 x 23.0 x 17.5 cm, gross weight ca. 4.70 kg) 330 mm (54.5 x 23.0 x 17.5 cm, gross weight ca. 4.20 kg) 240 mm 56'000 seals / pallet

Storage
Seals should be stored in original box away from direct sunlight and chemical fumes. Store at 22°C/50% RH. Typical shelf life of seals made of PE are approx. 18 months from date of manufacture. Nevertheless please do not order more than an annual quantity.

© Unisto, www.unisto.com

How to close

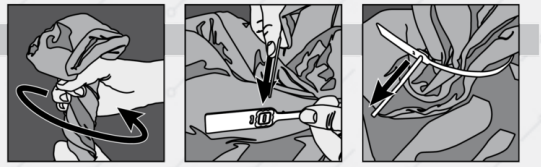

How to open

© Unisto, www.unisto.com